# Fixed Voltage Regulators-T0126 Plastic Package

## REFERENCE TABLE

| Code | Stock No. |
|---|---|
| TDA1405 | 34792H |
| TDA1412 | 34793F |
| TDA1415 | 34794D |

## DESCRIPTION

These monolithic voltage regulators feature high temperature stability, internal overload and short circuit protection, low out-put impedance and excellent transient response.
They are intended for use as voltage supply for consumer applications.

## ABSOLUTE MAXIMUM RATINGS

| | |
|---|---|
| Input voltage (TDA1405) | 20V |
| (TDA1412) | 27V |
| (TDA1415) | 27V |
| Power dissipation (free air, $T_A$=25°C) | 1.25W |
| Power dissipation (infinite heat sink, Tc=25°C) | 14W |
| Storage temperature | −55°C to 125°C |
| Operating temperature | 0 to 70°C |

## FEATURES

Tight tolerance for output voltage load regulation.
Less than 1% ripple rejection.
56 dB typical low output impedance.
Excellent transient response.
High temperature stability.

## DIMENSIONS

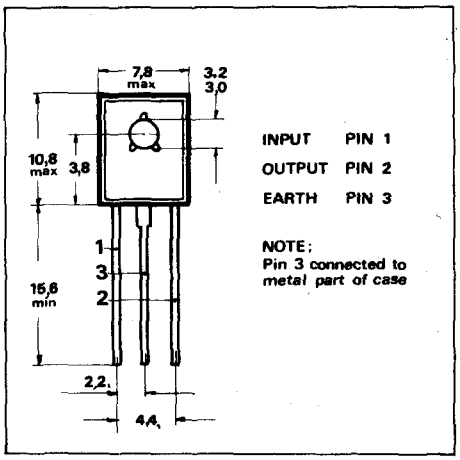


## TYPICAL ELECTRICAL CHARACTERISTICS

| Parameter | TDA1405 | TDA1412 | TDA1415 | Unit |
|---|---|---|---|---|
| Output voltage | 5 | 12 | 15 | V |
| Load regulation | 0.3 | 0.3 | 0.3 | % $V_{OUT}$ |
| Regulated output current | 600* | 500* | 450* | mA |
| Output resistance | 15 | 20 | 60 | mΩ |
| Supply voltage rejection | 60 | 60 | 56 | dB |
| Output noise voltage | 70 | 150 | 180 | μV |
| Quiescent drain current | 9 | 10 | 10 | mA |
| Temperature coefficient | 0.5 | 1.2 | 1.5 | mV/°C |
| Short circuit current | 200 | 100 | 85 | mA |

*minimum value