70066

NOTES:

1) MATERIAL: G.F. POLYESTER
2) HOUSING TO BE USE WITH TERMINAL PT. NO. 70058-****
3) SEE CHART FOR CIRCUIT SIZES.
4) TO BE USED WITH (0.64)/.025 SQ. OR RD. PINS.
5) PARTS STACKABLE END TO END ON (2.54)/.100 CENTERS.
6) REFER TO PRODUCT SPECIFICATION NO. : P.S.-70058
7) PARTS MAY OR MAY NOT BE SUPPLIED WITH EXTERIOR CORE-OUT CONFIGURATION. SEE DWG. SD-70066-**** FOR OPTIONAL HOUSING DETAILS.
8) PACKAGE PER PK-70066-100.

CKT. SIZE	EDP. NO.	ENG. NO.	A	B
2	50-57-9502	70066-0211	(2.54) .100	(5.05) .199
3	50-57-9503	70066-0212	(5.08) .200	(7.59) .299
4	50-57-9504	70066-0213	(7.62) .300	(10.13) .399
5	50-57-9505	70066-0214	(10.16) .400	(12.67) .499
6	50-57-9506	70066-0215	(12.70) .500	(15.21) .599
7	50-57-9507	70066-0216	(15.24) .600	(17.75) .699
8	50-57-9508	70066-0217	(17.78) .700	(20.29) .799
9	50-57-9509	70066-0218	(20.32) .800	(22.83) .899
10	50-57-9510	70066-0219	(22.86) .900	(25.37) .999
11	50-57-9511	70066-0220	(25.40) 1.000	(27.91) 1.099
12	50-57-9512	70066-0221	(27.94) 1.100	(30.45) 1.199
13	50-57-9513	70066-0222	(30.48) 1.200	(32.99) 1.299
14	50-57-9514	70066-0223	(33.02) 1.300	(35.53) 1.399
15	50-57-9515	70066-0224	(35.56) 1.400	(38.07) 1.499
16	50-57-9516	70066-0225	(38.10) 1.500	(40.61) 1.599
17	50-57-9517	70066-0226	(40.64) 1.600	(43.15) 1.699
18	50-57-9518	70066-0227	(43.18) 1.700	(45.69) 1.799
19	50-57-9519	70066-0228	(45.72) 1.800	(48.23) 1.899
20	50-57-9520	70066-0229	(48.26) 1.900	(50.77) 1.999
21	50-57-9521	70066-0230	(50.80) 2.000	(53.31) 2.099
22	50-57-9522	70066-0231	(53.34) 2.100	(55.85) 2.199
23	50-57-9523	70066-0232	(55.88) 2.200	(58.39) 2.299
24	50-57-9524	70066-0233	(58.42) 2.300	(60.93) 2.399
25	50-57-9525	70066-0234	(60.96) 2.400	(63.47) 2.499

70066

OPTION "H"

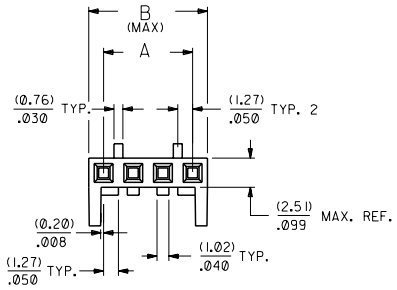

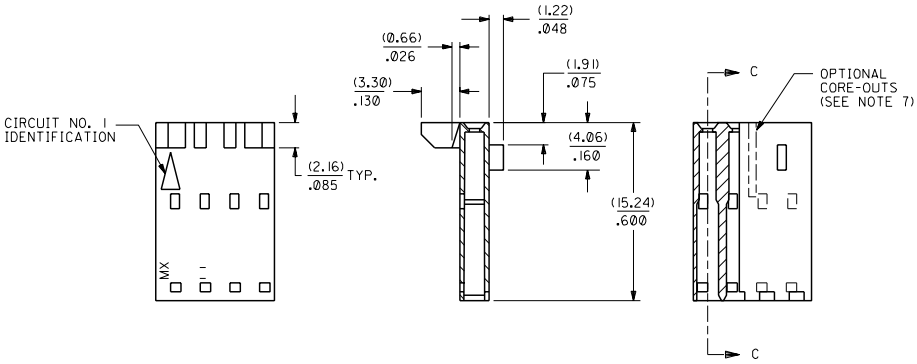

SECTION C-C

LTR.	REVISIONS	LTR.	REVISIONS
		C	REVISED PER ECR# U10967 8-8-91 MJM/MGB
		B	REVISED PER ECR# U80051 3-27-89 MGB
D	ADD PKG NOTE PER UDT2000-0468 SCHAFER 99/12/1	A	RELEASE DRAWING FOR MANUFACTURE PER ERO NO. 24037 2/26/87 BJS

DIMENSIONS SHOWN (METRIC) INCH
UNLESS OTHERWISE SPECIFIED TOLERANCES: ANGULAR ± 1/2°

	INCH	METRIC
3 PLACE	± .010	---
2 PLACE	± .014	± 0.25
1 PLACE	---	± 0.35

DRAFT WHERE APPLICABLE MUST REMAIN WITHIN DIMENSIONS

DRWG. BY BJS | CHK'D. BY | APP'D. BY | SCALE 4:1

MFG. | SH. | REV.

▽ = 0 ▼ = 0 REVISE ONLY ON CAD SYSTEM

TITLE HOUSING CONNECTOR (2.54)/.100 GRID STACKABLE SINGLE ROW

MOLEX INCORPORATED LISLE, ILL. 60532 U.S.A.

SHEET NO. 1 | DATE 02/26/87

PART NO. | DRWG. NO. SD-70066-0211-0234

FILE NAME 70066021I

THIS DRAWING CONTAINS INFORMATION THAT IS PROPRIETARY TO MOLEX INC. AND SHOULD NOT BE USED WITHOUT WRITTEN PERMISSION.

DIV. DA | SIZE C

Downloaded from Elcodis.com electronic components distributor